Controlled Automation ABL-86T

ANGLE AND FLAT BAR LINE

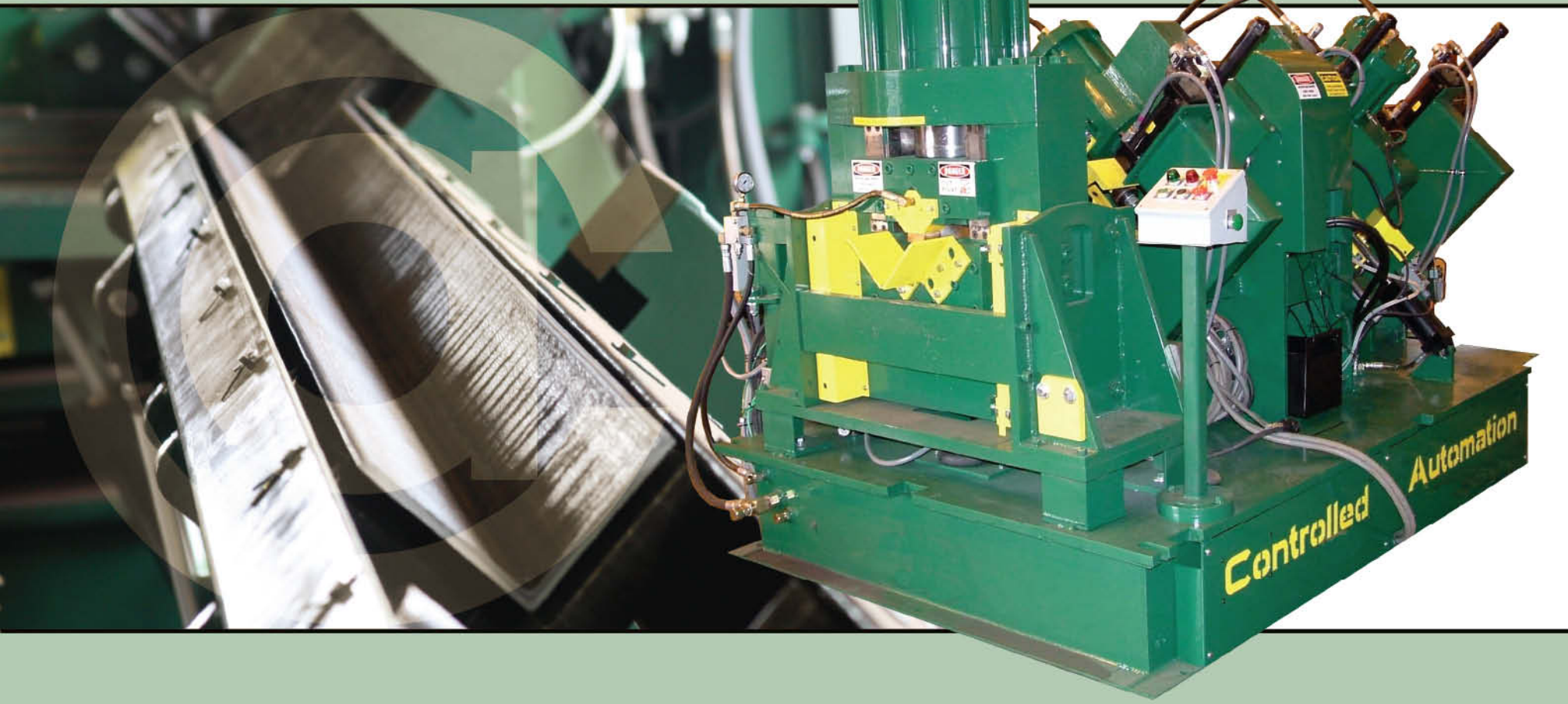

501-557-5109 • www.controlledautomation.com • sales@controlledautomation.com

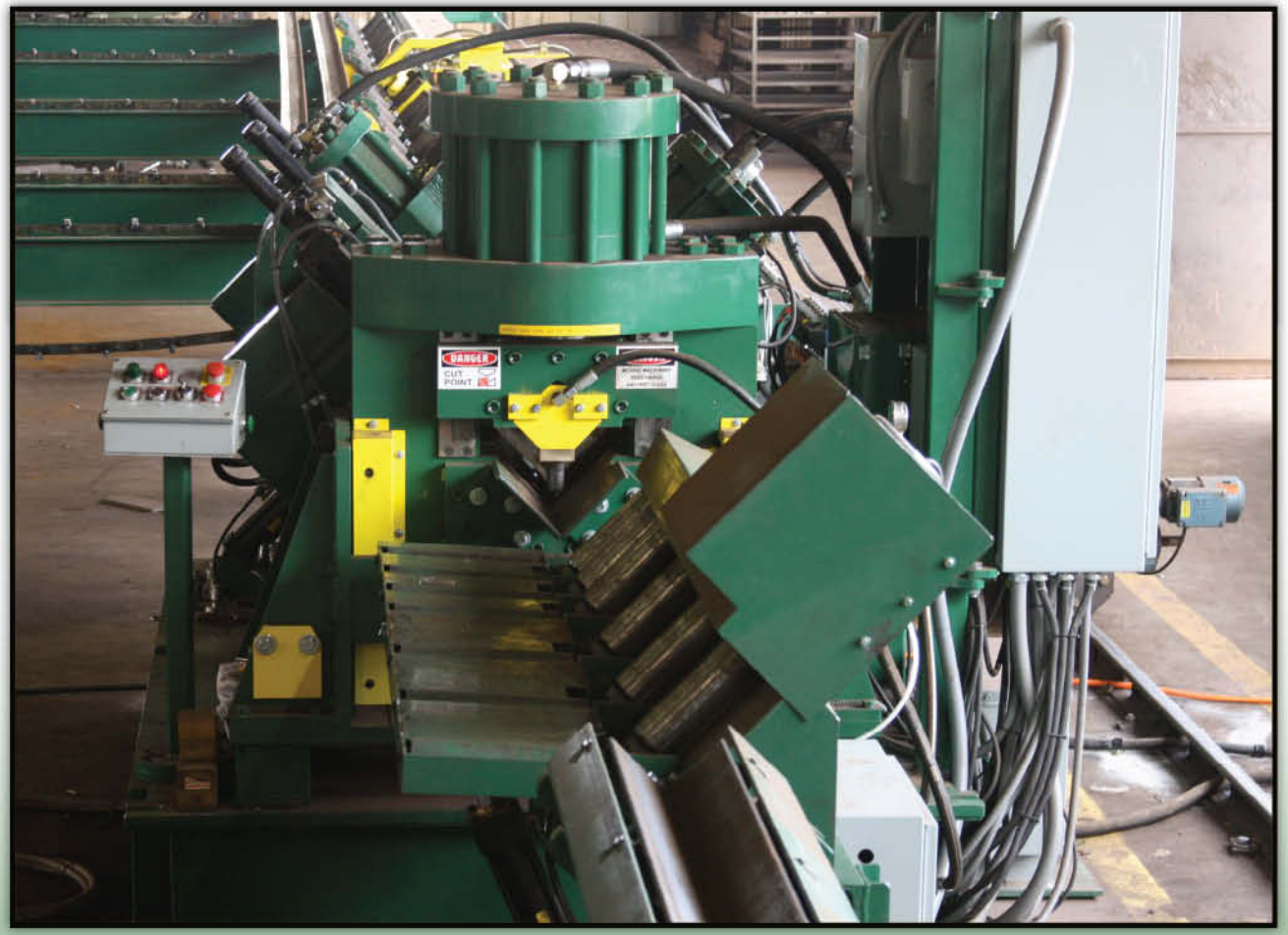

ABL-86T

The ABL-86T is a high speed production machine for punching and shearing angle and flat bar. As with all Controlled Automation equipment, the ABL-86T is designed to be rugged, reliable, simple to operate, and easy to maintain.

Machine Base

The base of the ABL-86T is made of a rigid steel framework with a steel plate mounting surface which supports the punch frames, the part stenciling unit, the hold downs, the pinch wheels, and the shear. Most of the plumbing *(hydraulic and air)* is run inside the machine base for protection, and to keep the machine base clean. All the plumbing lines within the base are made of welded steel pressure pipe.

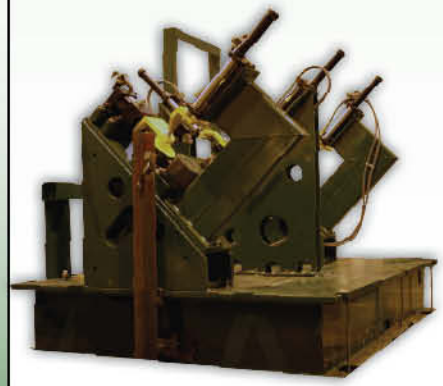

Stripper

Each punch frame has our unique, automatically operated hydraulic stripper to hold the material flat against the die while the punch is retracting.

Punch Frames

The machine has two 86 ton punch frames, one for each leg of the angle. Each punch frame has a single punch *(for 2 punches per leg, see ABL-86T-2)*. The punch has extend and retract limit switches to indicate when the punch has extended through the material and when it has fully retracted.

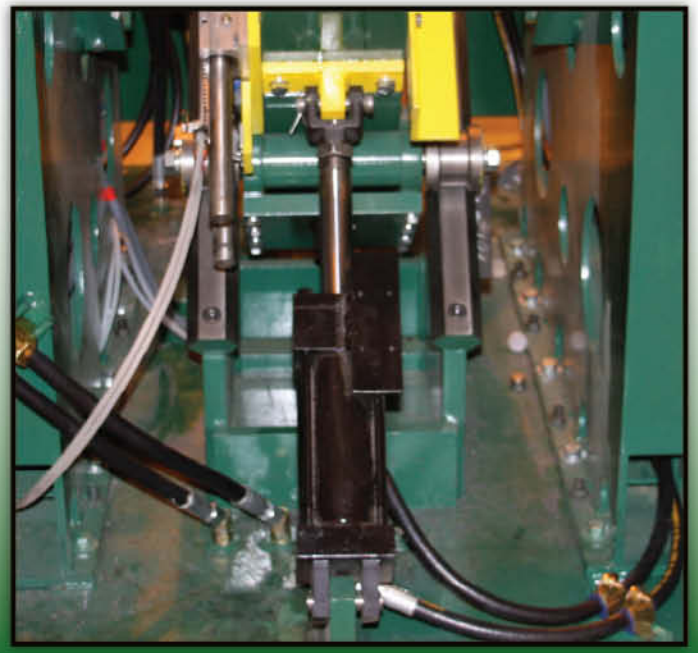

Hydraulic Positioning

The punch frames are positioned hydraulically using a computer controlled hydraulic valve system. The valve system provides fast, accurate positioning of the punch frames.

Punch diagram in fully extended position

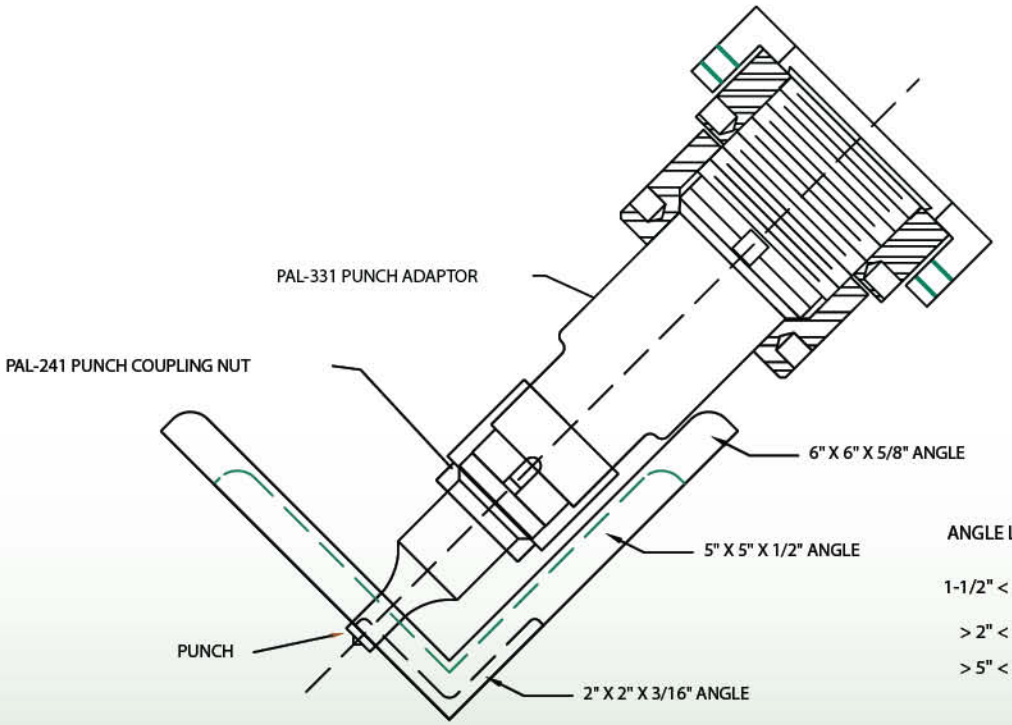

END VIEW
ALONG THE "X" AXIS
OR DOWN THE LENGTH OF THE MATERIAL

MINIMUM GAUGE

ANGLE LEG LENGTH	MINIMUM GAUGE
1-1/2" < 2"	11/16" + ANGLE LEG THICKNESS
> 2" < 5"	1-1/16" + ANGLE LEG THICKNESS
> 5" < 6"	1-3/16" + ANGLE LEG THICKNESS

PUNCH INFORMATION

NOTE:
PUNCH USED ON STANDARD PUNCH STEM IS CLEVELAND
PUNCH & DIE FIG. NO. C-770
DIE IS FIG. NO. C-740
NOTE:
KEYWAY FOR SHAPED PUNCHES IS PARALLEL TO "X" AXIS.

TOOLING TO CHANGE PUNCHES

NOTE: ALL TOOLING NEEDED TO CHANGE PUNCHES IS SUPPLIED
NOTE: A 3/16" ALLEN WRENCH IS NEEDED TO CHANGE DIES

NOTE: MAXIMUM TONNAGE FOR THIS STEM IS 86 TONS
THIS IS THE STANDARD TOOLING FOR THIS MACHINE

Punch Adapters

The ABL-86T is designed with removable and replaceable punch adapters. Each Controlled Automation ABL-86T is shipped with punch adapters that will accommodate 100 ton tooling *(Cleveland Punch & Die C-770 punches)*. Additional *optional* punch adapters can be supplied to allow the replacing of the standard adapters with ones that will accept smaller tooling. This will allow holes closer to the legs of the angle. Controlled Automation can design punch adapters to fit most tooling. This allows you to match the tooling to the needs of almost any job requirement.

Punch Adapter Change Screen

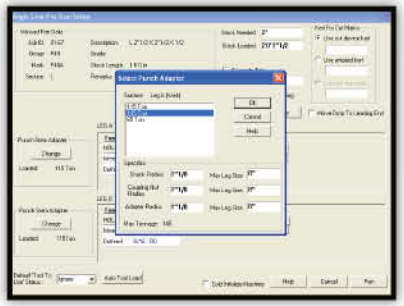

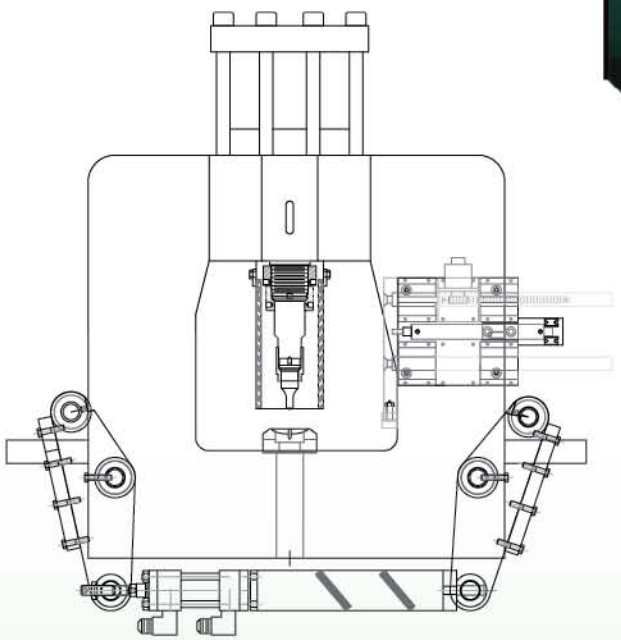

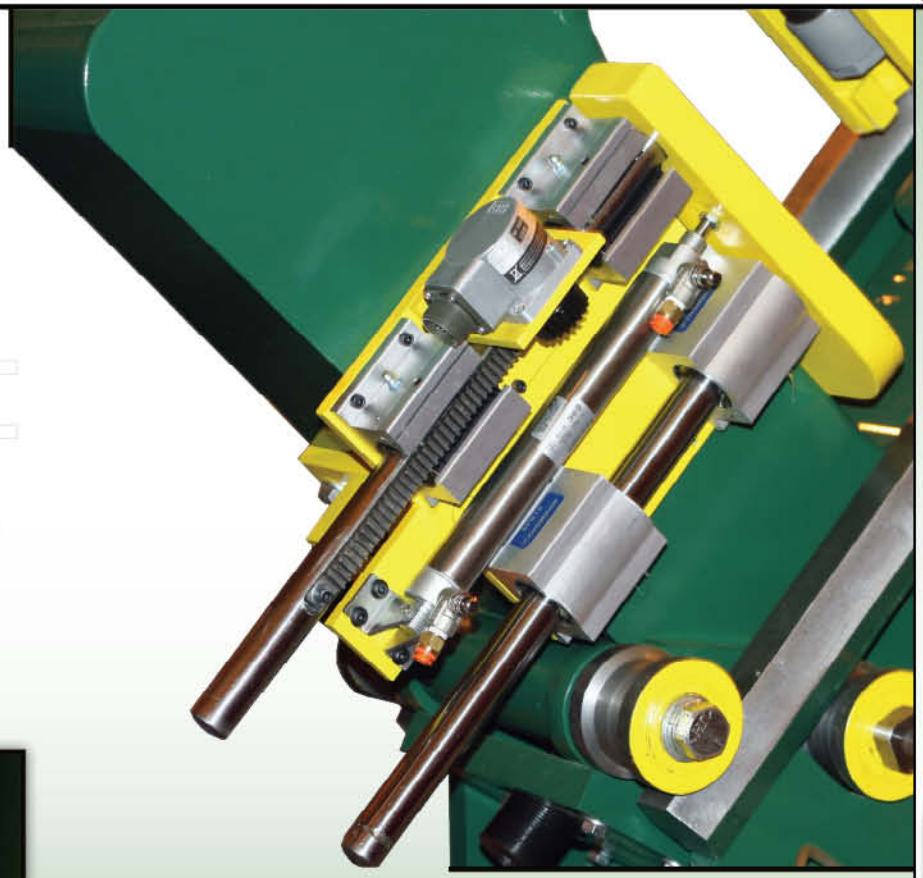

Material Probing

All material has some bow or curve. The heavier the material the harder it is for the curve to be taken out by the material clamps. This is especially true for a sweep in flat bar. The ABL-86T uses continuous material probes so the true material position with respect to the punch is always measured. This achieves greater hole accuracy for both angle and flat bar. Probing is essential on the leading and trailing ends of the material when the material is only clamped on one side of the punch.

Punch Frame Lift

The punch frames have a lift mechanism that allows the die to rise to the material during punching. After punching the hole, the frames lower slightly to keep the material from dragging on the die seat during material positioning. This also allows any burr on the material caused by dull punches to break free of the die. This assists in high speed positioning of the material.

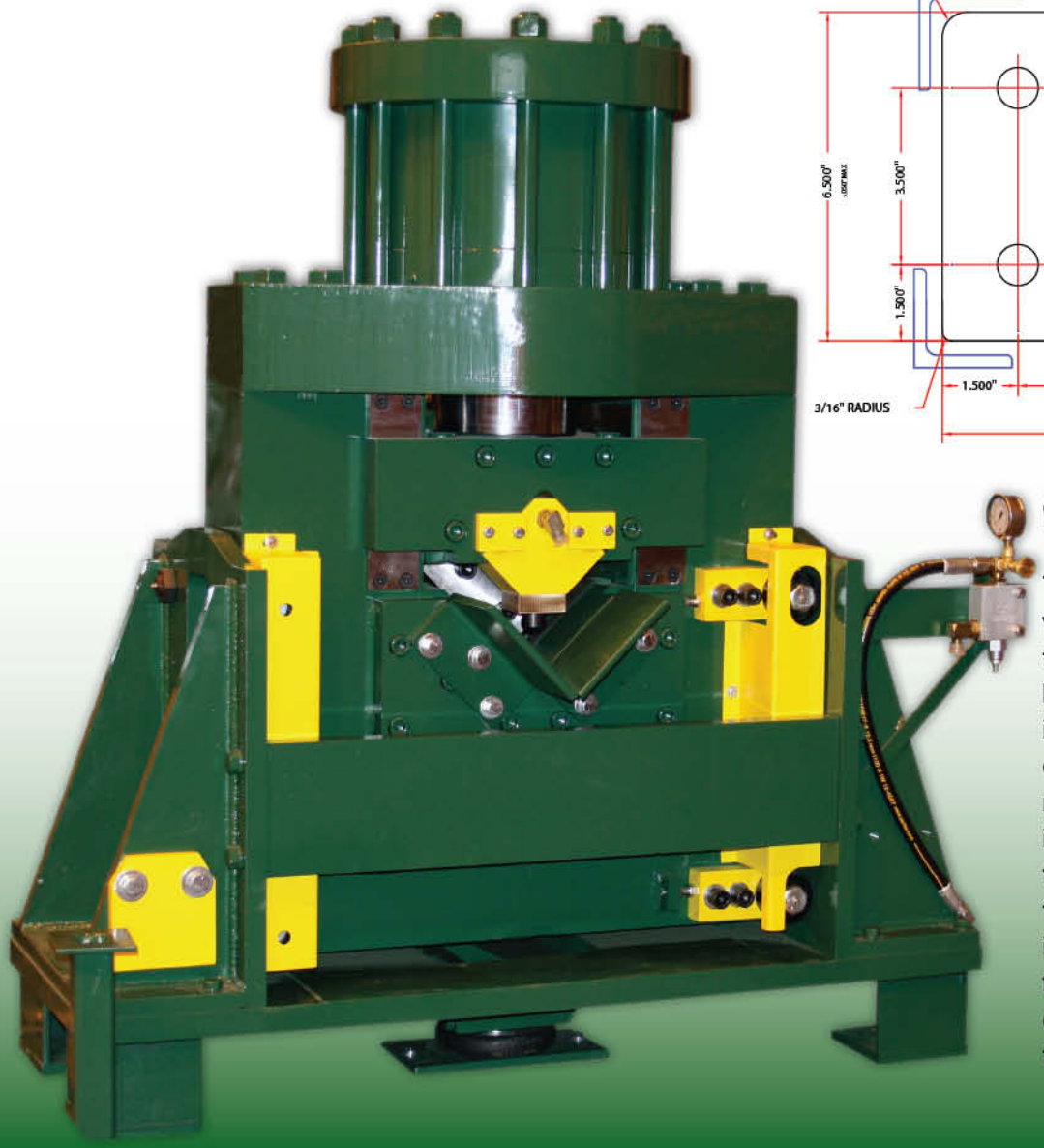

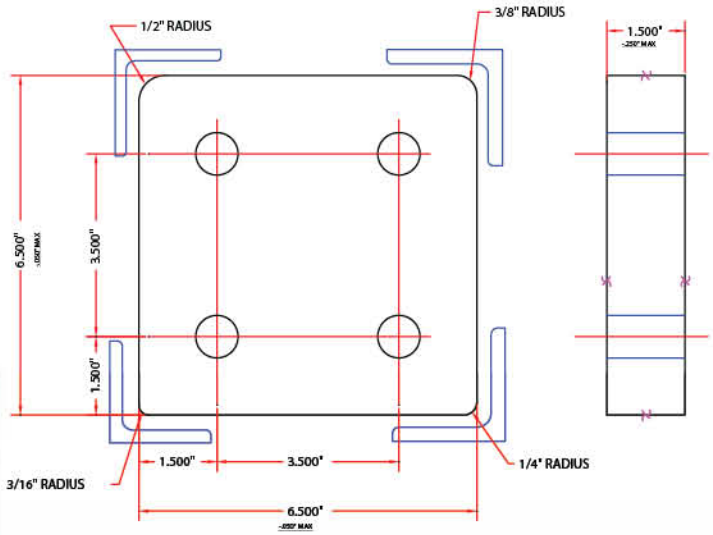

Shear Frame

The shear was designed specifically with the ABL-86T in mind. It works with the overall scheme of the ABL-86T by being fast, accurate, and making quality, zero kerf cuts. Its ability to move out of the datum planes allows for fast material positioning speeds. The shear is designed with the female blades on the out-feed side of the machine. The female blades raise to the material during the cut. This means that the out-feed conveyors do not have to pivot during the cut, or be located lower than the material datum.

Male Blade Index

To achieve superior cut quality on all angle thicknesses the male blade is designed with four different radii to help match the fillet in the angle. The blade may be shimmed and rotated to accommodate the different material thicknesses and sizes. Blade life is prolonged by using all four sides.

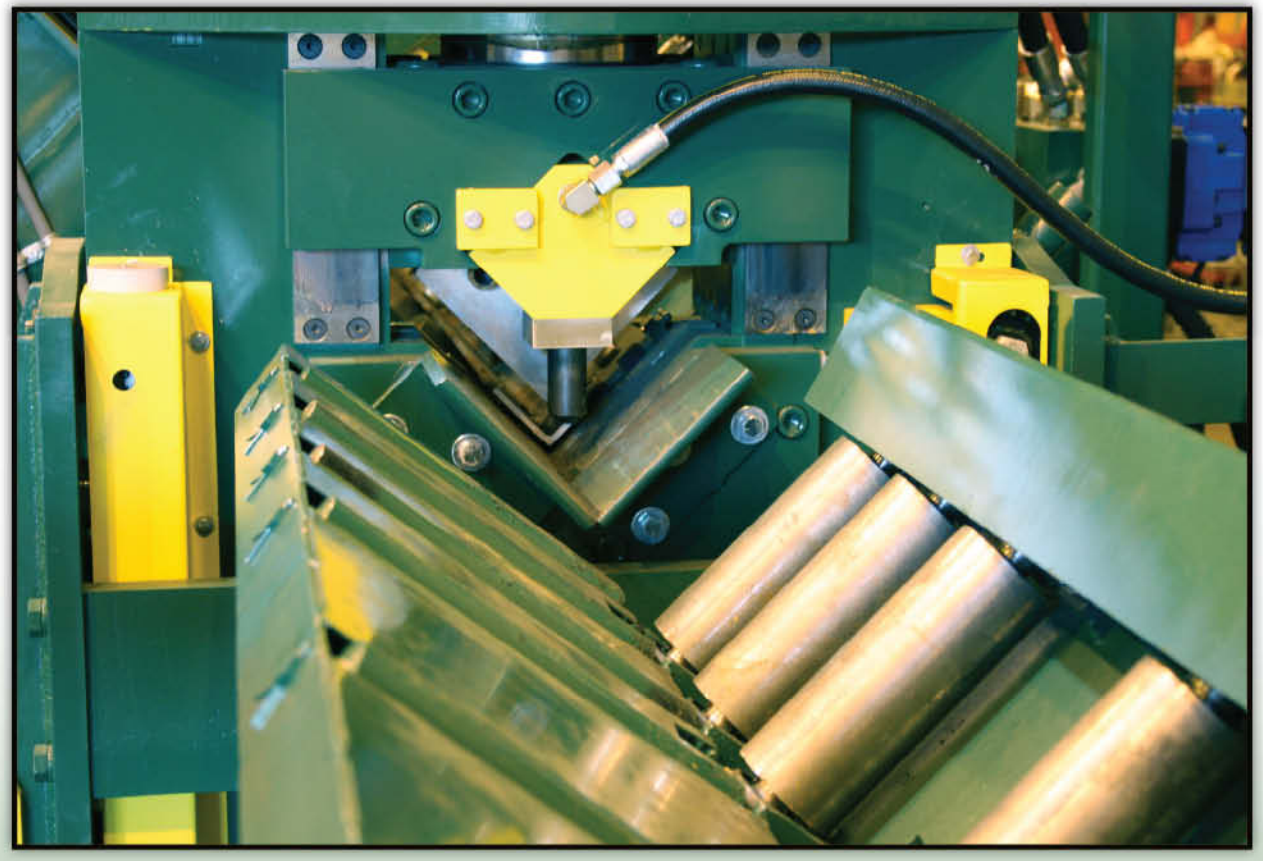

Frame Set

The shear frame has a pneumatic counter-balance mechanism that allows the female blade to rise up to the material during shearing and drop down away from the material when not shearing. This keeps the material from dragging on the blade during positioning. Higher material speed positioning and longer blade life are achieved.

Larger Shear Clearance

This *optional* feature will increase the shear material size capacity of the machine from 6"X6"X5/8" to 7"X7"X1/2". This shear will not process channel.

Shear Out-feed Hold Down

For straight, square, and accurate shear cuts, the material must be firmly held flat against the bottom female shear blades during the shear operation. This is accomplished by the hydraulic ram on the out-feed side of the shear.

As the male shear blade enters the material, the material has a tendency to bend into the female blade before shearing, causing out of square, ragged cuts. The ABL-86T shear has a hydraulic ram on the out-feed side of the shear to keep the material flat on the shear's bottom female shear blade maintaining a square, clean cut.

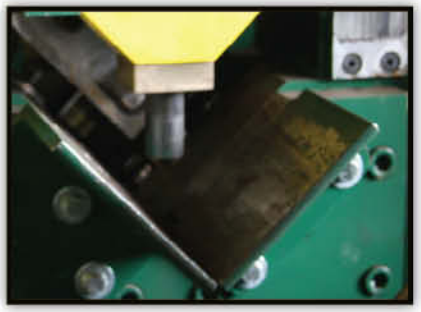

Holddowns

The holddowns are wheels that pneumatically engage the material to keep the material processing through the machine correctly. They help bowed material process through the machine without hitting the punch frames or the shear. The holddowns also keep the material from moving during punching and shearing.

Pinch Wheels

The pinch wheels are designed to pull the material through the machine at high speeds. The pinch wheels pinch the material between a knurled wheel and a hold down wheel using an air cylinder. The knurled wheel is turned by an AC servo motor system with encoder feedback to the computer.

Manual Controls

The operator control station has manual switches that may be used by the operator to turn on the AC power, turn on the hydraulics, halt the machine, move the units, convey the material, and other machine functions.

Single Wheel Measuring

This material length measuring *option* uses a single servo powered pinch wheel to pull the material through the machine on a non-powered "V-roll" conveyor. A separate measuring wheel contacts the material and rotates as the material is pulled through by the powered pinch wheel. The measuring wheel is located before the first punch frame. This *option* is normally combined with the weld station option to eliminate material drop. The drop without using a weld station is approximately the distance from the powered pinch wheel to the shear blade.

Dual Wheel Measuring

This material length measuring *option* uses two servo powered pinch wheels, one before the first punch and the other before the shear, to pull the material through the machine on a non-powered "V-roll" conveyor. There are two measuring wheels, one at the first pinch wheel and the other at the second pinch wheel, that measure the material as the pinch wheels move the material through the machine. This *option* reduces material drop by allowing the trailing end of the material to get closer to the shear. It may be combined with the weld station *option* to eliminate the material drop. The drop without using a weld station is approximately the distance from the second powered pinch wheel to the shear blade.

Following Probe

This material length measuring *option* uses two servo powered pinch wheels, one wheel measuring unit, and one powered measuring probe on a non-powered "V-roll" conveyor. The powered measuring probe grips the trailing end of the material and pushes the material to the first powered pinch wheel. The powered pinch wheel now pulls the material through the machine with the measuring probe gripped on to the trailing end of the material. The measuring probe is used for material length measurement until the measuring probe reaches the first powered pinch wheel. At this point the powered measuring probe ungrips from the material, returns to the material load position, and waits for the next piece of material to be loaded. The remaining material is now measured using the wheel measuring unit located at the pinch wheel in front of the shear. The combination of measuring probe and measuring wheel allows for a fast and very accurate machine with the ability to produce 20' finished parts from a 20'-1" stock length angle or bar.

Length Measuring Options

There are three possible measuring systems that can be purchased for the ABL-86T. Each one has a particular purpose and cost range.

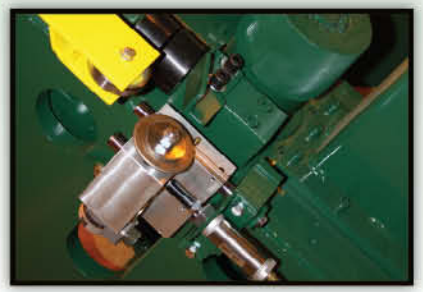

Part Stenciling Units

Thirty Six Position Wheel Stenciling Unit

The *optional* part stenciling unit is specifically designed to imprint alpha and numeric characters on one leg of angle and flat bar. The marking unit is built from a 'O' style steel frame hydraulic press with a character indexing wheel turned by a servo motor. The marking press is mounted on its own base with all necessary valves, cylinders, and hoses included. With this unit one character is imprinted at a time. This unit produces permanent marks approximately 1/32" deep.

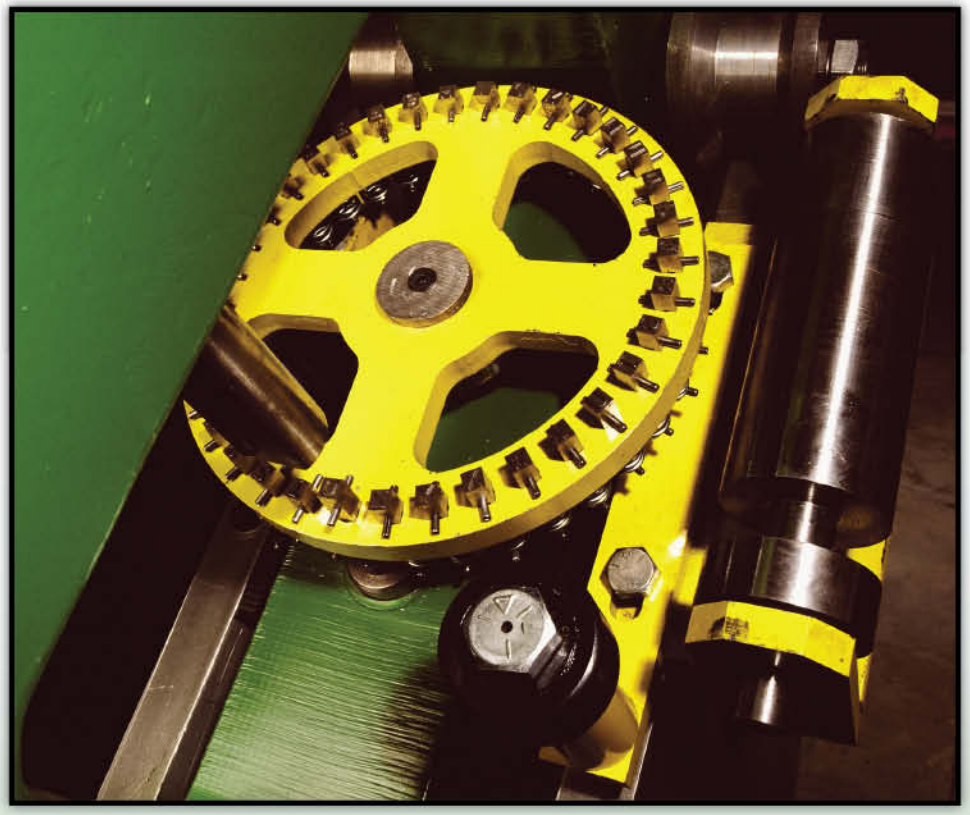

Multi-Position Wheel Stenciling Unit

This *option* allows eight different character strings of six characters per string to be preloaded into the character wheel. The entire string of six characters is imprinted at one time. This works well for customers that have many repeating parts with the same name.

Weld / Tack Station

The Weld/Tack Station *option* is designed for a continuous feed of material through the machine and to reduce the drop on the trailing end of the material. As the trailing end of the material passes the weld station the material will stop and allow the operator to tack on an addition piece of material to continue the feeding into the machine. The operator can choose to leave the weld in the part *(depending on the part length)* or shear it out as a small piece of scrap.

Storage And Loading Conveyor

The purpose of the Storage and Loading Conveyor is to stage angle and flat bar adjacent to the ABL-86T in-feed conveyor and to load this material onto the in-feed conveyor for processing. A bundle of material can be placed on a customer supplied bundle rack *(drawings supplied by Controlled Automation)* and material rolled onto the loading conveyor. The loading conveyor is indexed by the operator as each piece is loaded. When the table is full the operator need only roll another piece onto the loading conveyor as a piece is processed through the machine. This system frees up the crane or lift trucks while the material is being processed. This also allows the loading conveyor to be staged with different material as the machine is running.

(Controlled Automation does not supply the bundle rack)

Hydraulic Power Unit

The hydraulic power unit is efficiently designed to supply flow only when there is a demand for pressure. This keeps the hydraulic oil from heating which reduces the chance of hydraulic system failure. The hydraulic power unit has all filters located for ease of maintenance. The unit is easily accessible being on its' own palletized base.

Powered Out-Feed Conveyor and Work Surface

This is an *optional* 5' long conveyor located on the out-feed side of the shear. It is powered. One side of its rolls can be lowered and used as a work surface by the operator. This conveyor, due to its close proximity to the operator, cannot be used as a dump conveyor.

Powered Out-Feed and Dump Conveyor

This *optional* 15' conveyor is a "V-style" chain driven conveyor used to automatically or manually convey and dump the parts at drop locations. The conveyor automatically dumps parts into a drop location based on the part's length. The computer senses the location of the part as it is moves down the conveyor by signals from photo eyes which are mounted down the length of the conveyor. When the part gets to the appropriate drop location the entire conveyor roller bed will pivot, dropping the material at the drop location. If a drop location becomes full a switch can be set so the next appropriate drop location can be used. The machine will continue to advance and punch the material as the dump conveyor is operating up to the point the advancing material interferes with the dump conveyor or the material needs to be sheared. Up to four dump conveyors can be tied together for a 60' material discharge and dump out-feed. The dump conveyor is always used with the 5' powered out-feed conveyor and work surface. In most circumstances the customer will build simple skid type racks to catch the material. This allows a chain to be wrapped around the material or access to the material by a fork truck.

Powered In-Feed Auxilary Pinch Wheel

An *optional* powered drive wheel assembly is added to the "V-style" in-feed conveyor to assist the operator in initially bringing the material into the machine for the start of a part run. This is controlled by a manual switch and is disabled during the part run. The powered in-feed conveyor is normally used for in-feed conveyors that are 60' long to assist the operator with heavy material. This *option* is also used when the in-feed and machine base are on opposite sides of a wall.

Non Powered Out-Feed Conveyor and Work Surface

This is an *optional* 5' long conveyor located on the out-feed side of the shear. It is not powered. One side of its rolls can be lowered and used as a work surface by the operator. This conveyor, due to its close proximity to the operator, cannot be used as a dump conveyor.

ABL-86T Production Specifications

Material positioning speed	0 TO 375 ft/min
Accuracy	1/32" mechanically
Punch capacity	86 tons
Maximum hole size	1-1/4" thru 1/2" thick material, 1-9/16" thru 5/8" thick material
Maximum slot size	1-1/2" X 1-1/4" in 5/8" material
Single-cut shear capacity	250 tons / 0" kerf

Material Specifications

Maximum length of material	40' *(for standard machine)* 60' *optional*
Minimum length of material	6'
Maximum angle size	6" x 6" x 5/8" *(7" x 4" x 1/2" optional)*
Maximum bar size	5/8" x 6" *(5/8" x 7" optional)*
Minimum angle size	1-1/2" x 1-1/2" x 3/16"
Minimum bar size	1/4" x 1-1/2"
Channels *(web punching only)*	
Maximum channel	6"
Minimum channel	3"

(when processing channel it cannot be cut with the shear. Channel must be pre-cut or cut by other means using the layout marks from the layout marking process.)

Stenciling Unit Options

Thirty Six Character Wheel Stencil

36 Characters	
Character height	3/8"
Characters	A thru Z
Numbers	0 thru 9
Character depth	1/32"
Max material thickness	1"
Channel legs	up

Eight Position Wheel Stencil

Character Depth	1/32"
Up to 6 character/position	
Character height	3/8"

Hydraulic Power Unit

Electric Motor	30 hp @ 1750 RPM
Low pressure pump	20 GPM @ 2000 PSI
High pressure pump	13 GPM @ 4500 PSI
Reservoir	90 gallons
Thermostat/oil heater	110 volts

For more complete information on this or any of our machines, contact our sales department at 501-557-5109 or sales@controlledautomation.com

(All specifications are subject to change without notice)

Controlled Automation specializes in the manufacture of automated structural steel drilling, punching, and shape cutting machinery. We also build material handling systems to complement each type of machine we offer. As well as new machinery, we are the industry leader in retrofitting control systems and remanufacturing existing structural steel fabricating machinery. All machines and controls are designed and manufactured entirely in the United States of America. All software is developed and supported in the United States of America.

US Mail
PO Box 888
Bryant, AR 72089
USA

501-557-5109
501-557-5618 Fax
sales@controlledautomation.com
www.controlledautomation.com

Manufacturing facility
15701 West Sardis Road
Bauxite, AR 72011
USA

© 2008 Controlled Automation, Inc. ABL-08-0001